ProDVX DS-25 - drawing

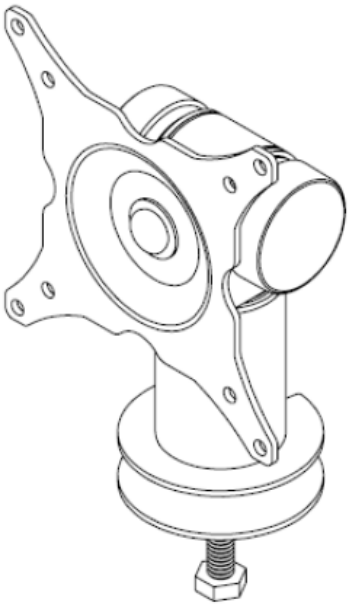

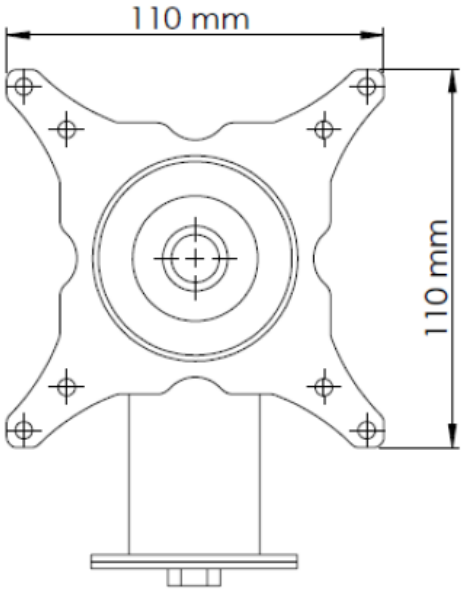

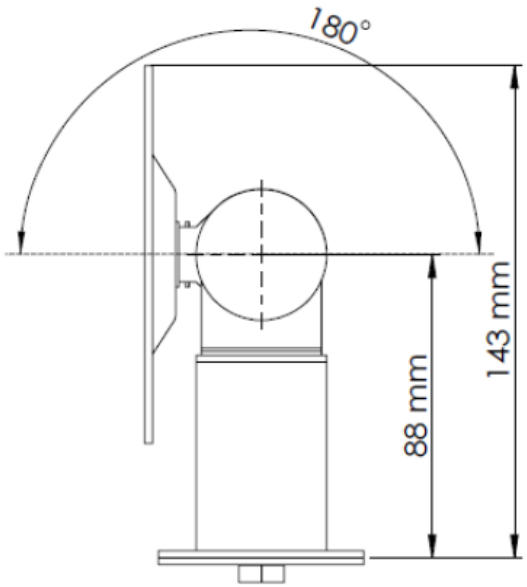

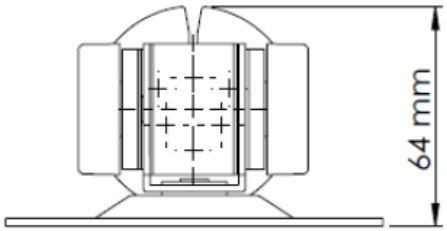

ProDVX has made every attempt to ensure the accuracy and reliability of the information provided on this drawing. However, the information is provided "as is" without warranty of any kind. ProDVX does not accept any responsibility or liability for the accuracy, content, completeness, legality, or reliability of the information contained on this drawing.